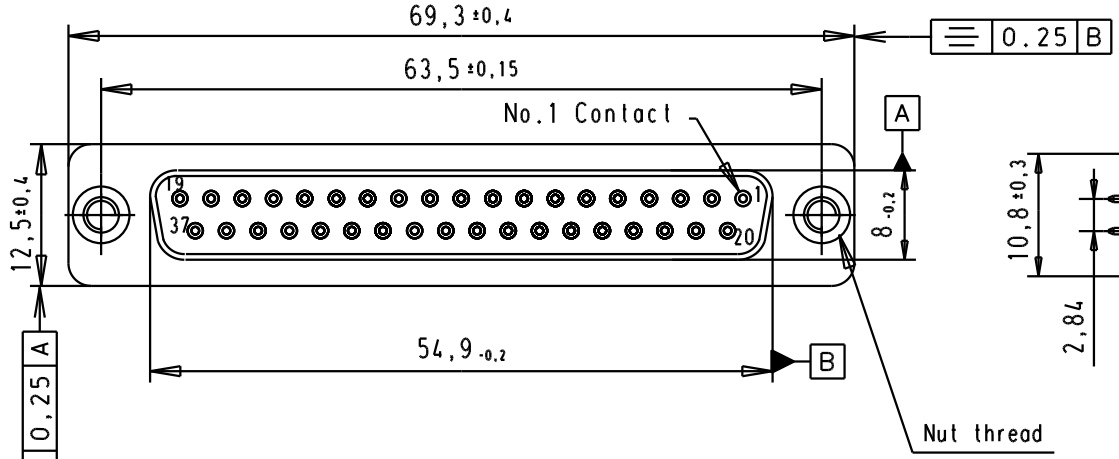

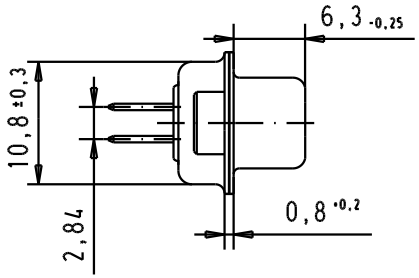

SPECIFICATION

Mating Cycles	500
Filter type	C
Capacitance	1000pf ±20%
Working Voltage	100v
Current Rating	7.5A
Insulation Resistance	>1GΩ

FREQUENCY (MHz)	ATTENUATION (dB)
5	1dB
10	3dB
50	12dB
100	20dB
500	34dB
1000	30dB

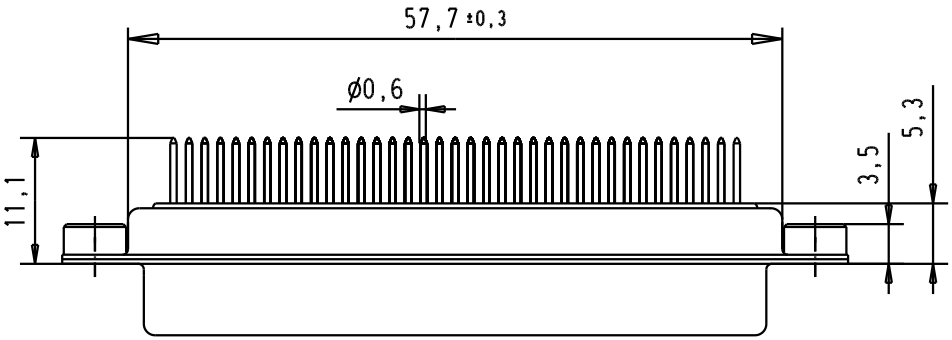

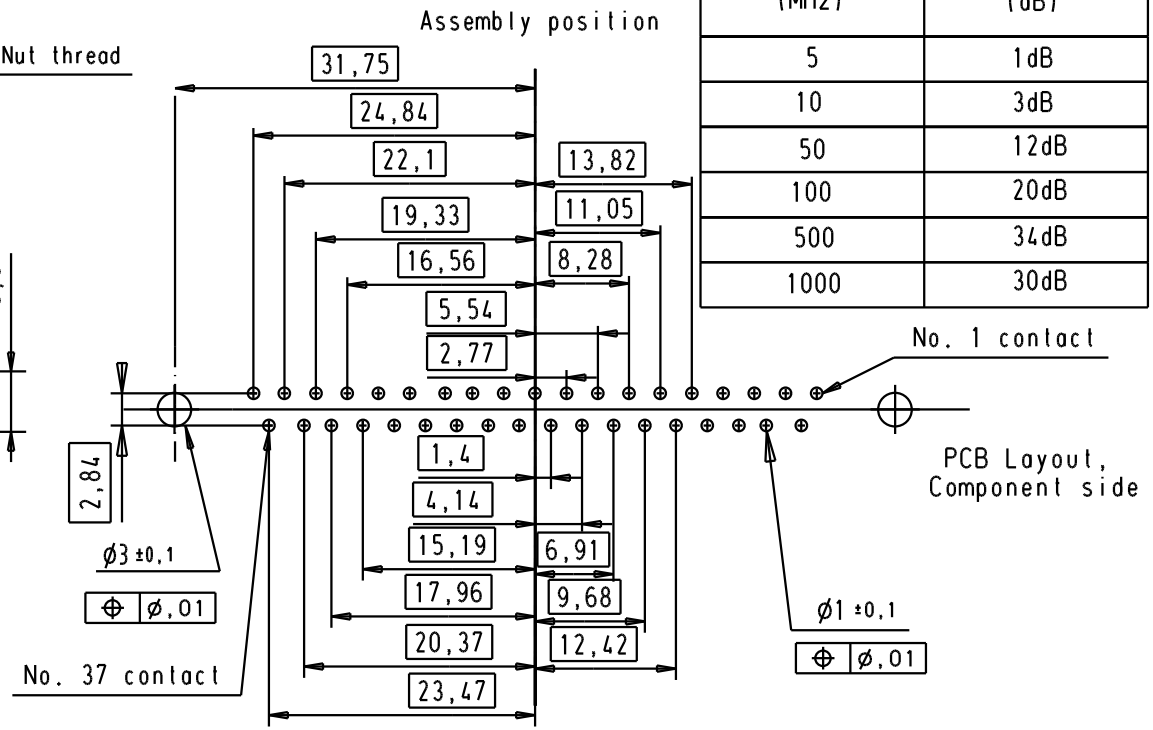

							Dat.	Name	All Dim. in mm Orig. Size DIN A 4	D-Sub, female, straight, 37 Poles, solder pins, tin plated shell with clinch nuts	Ma?Mstab/ Scale
						Detail.	8-JUL-02	CV			1.5:1
						Insp.					
						Stand.					
09644127238	M3		33079	29/08/05	JMDR	HARTING EURL F-95972 Paris				TB 0964412723x	Blatt/ Page 3/3
09644127237	UNC 4-40		31058	8-JUL-02	CV						
Part number	Nut thread		Mod.	Dat.	Name					Sub.	